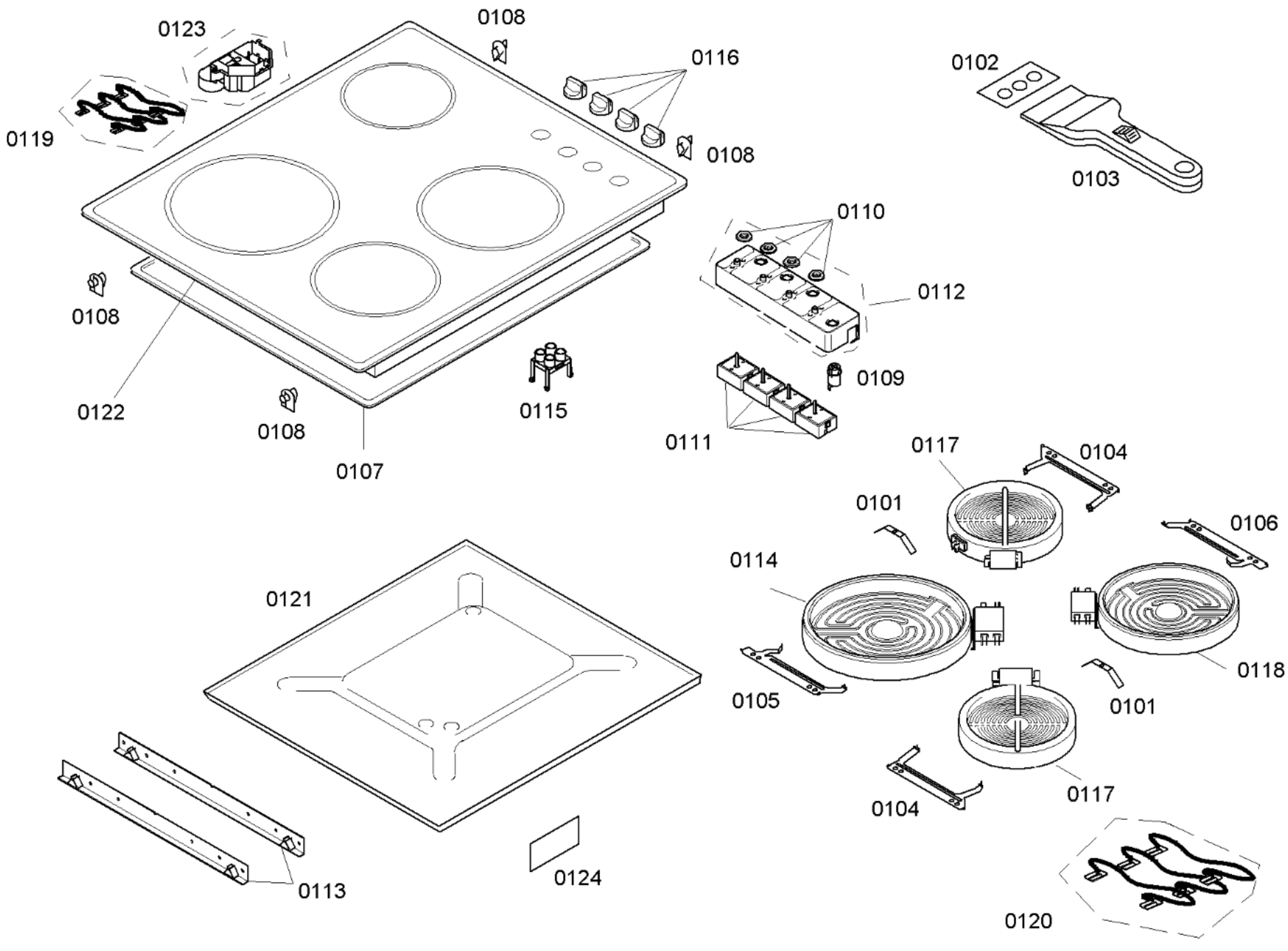

58300000067205 aet 000 c 1/1