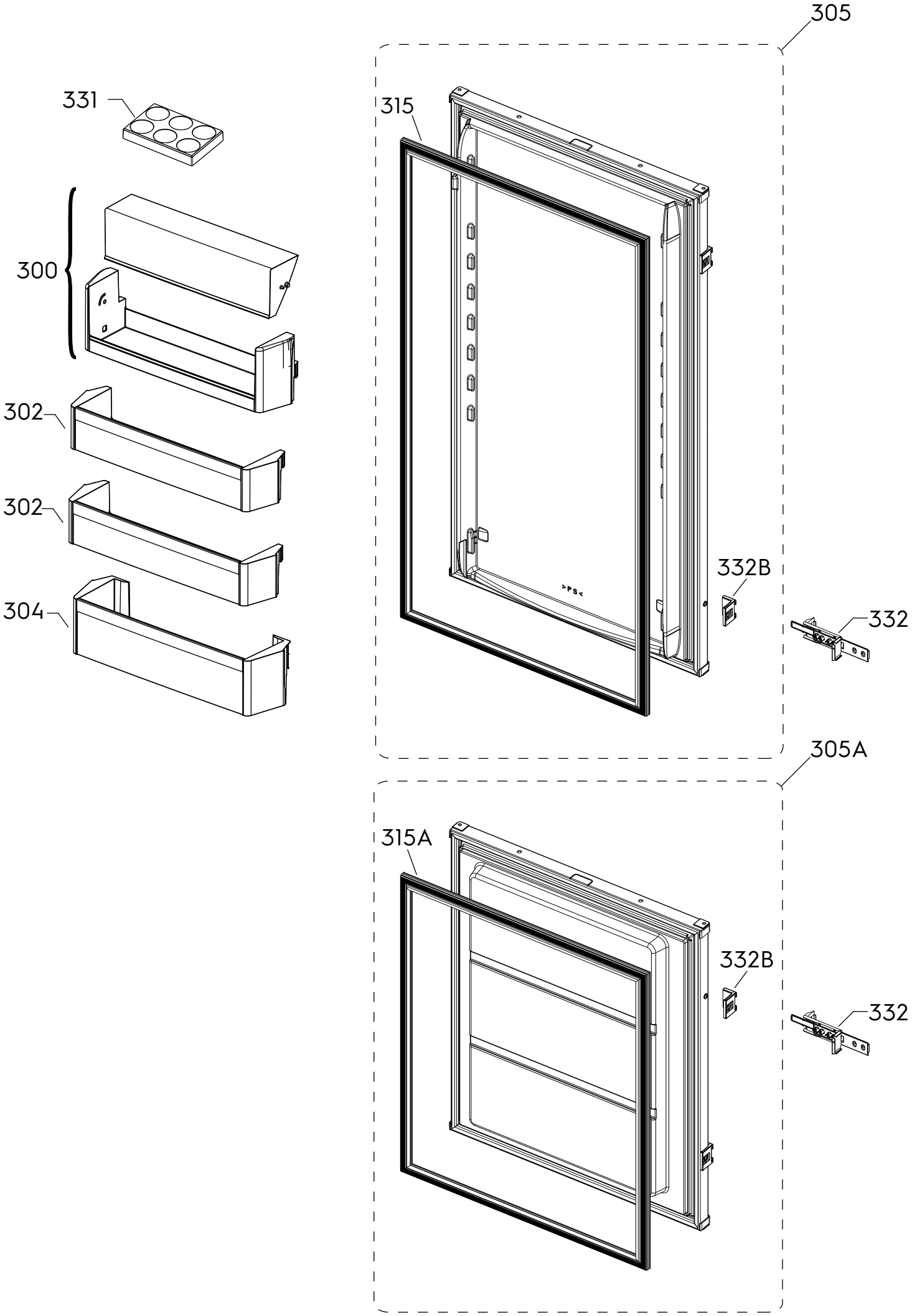

P09253105040