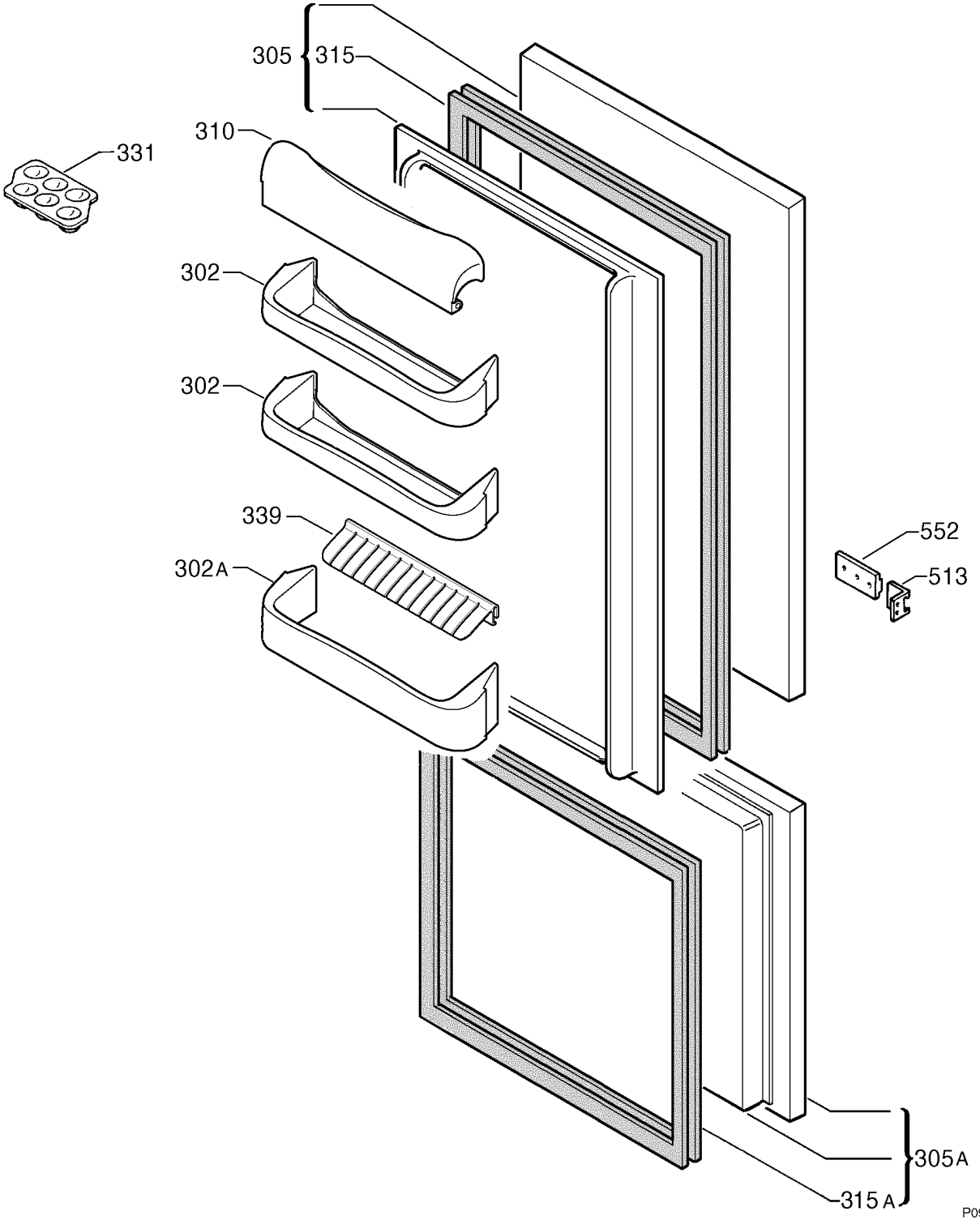

P09253004239