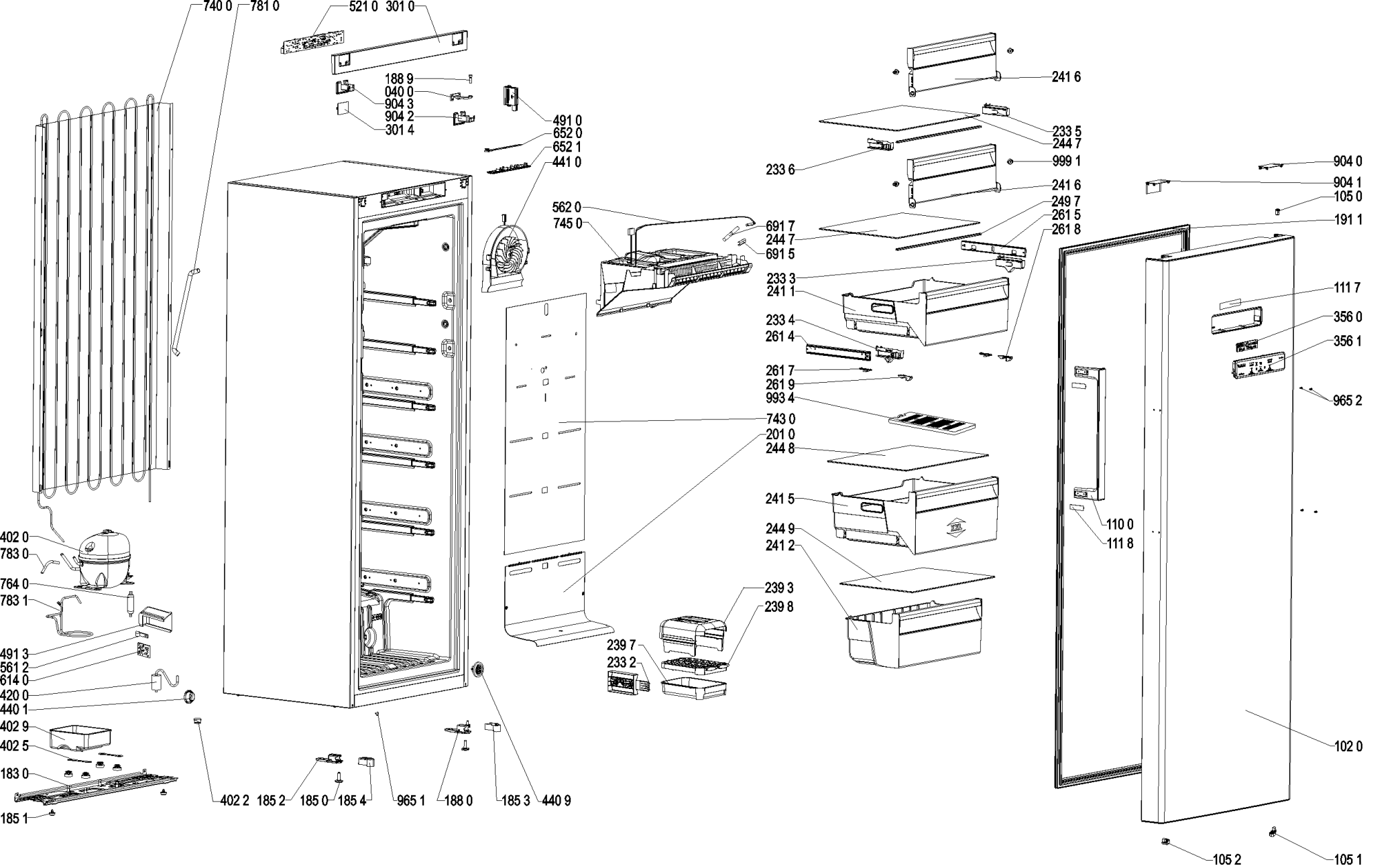


4000 106 07732