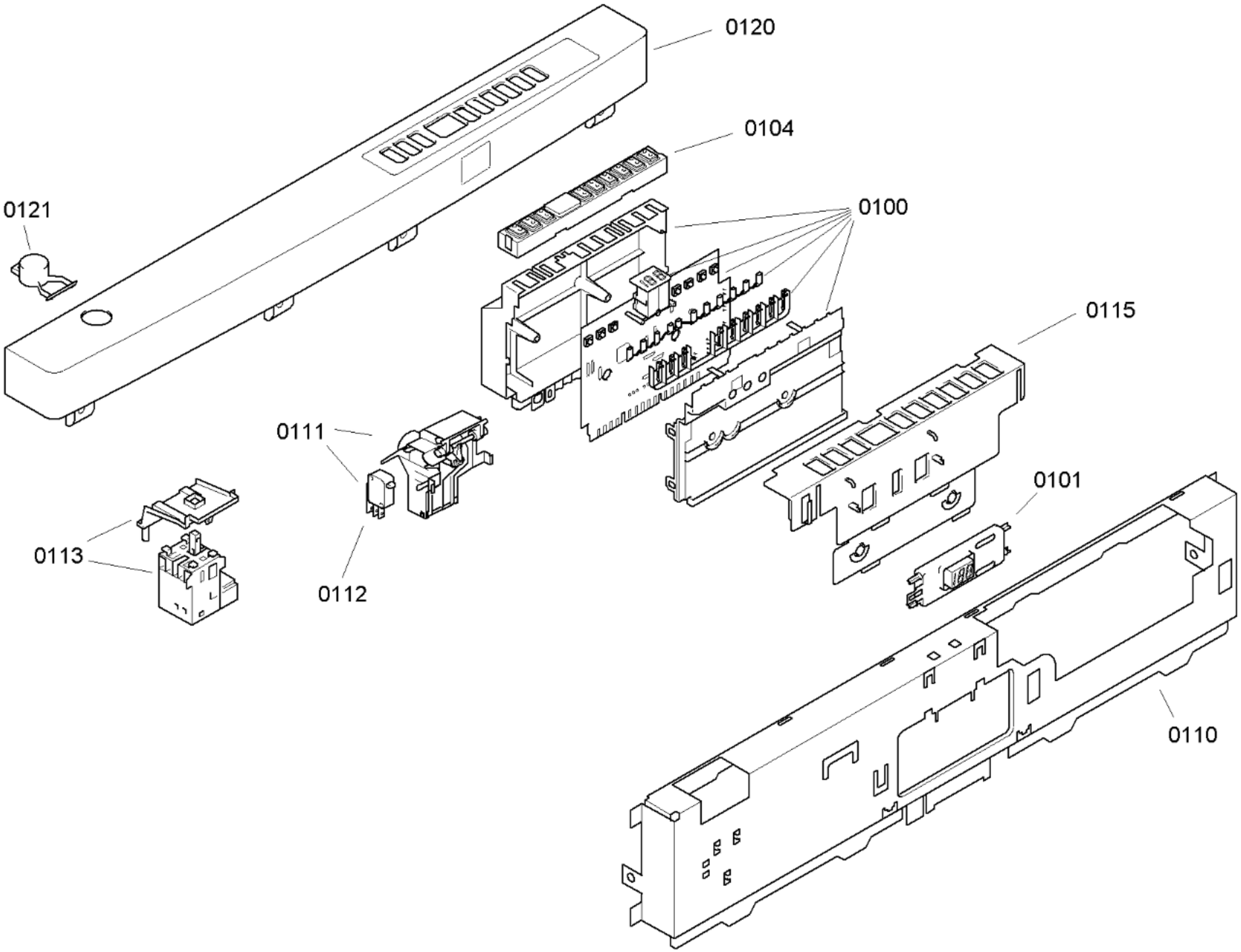

58300000113417 aet 000 b 1/6

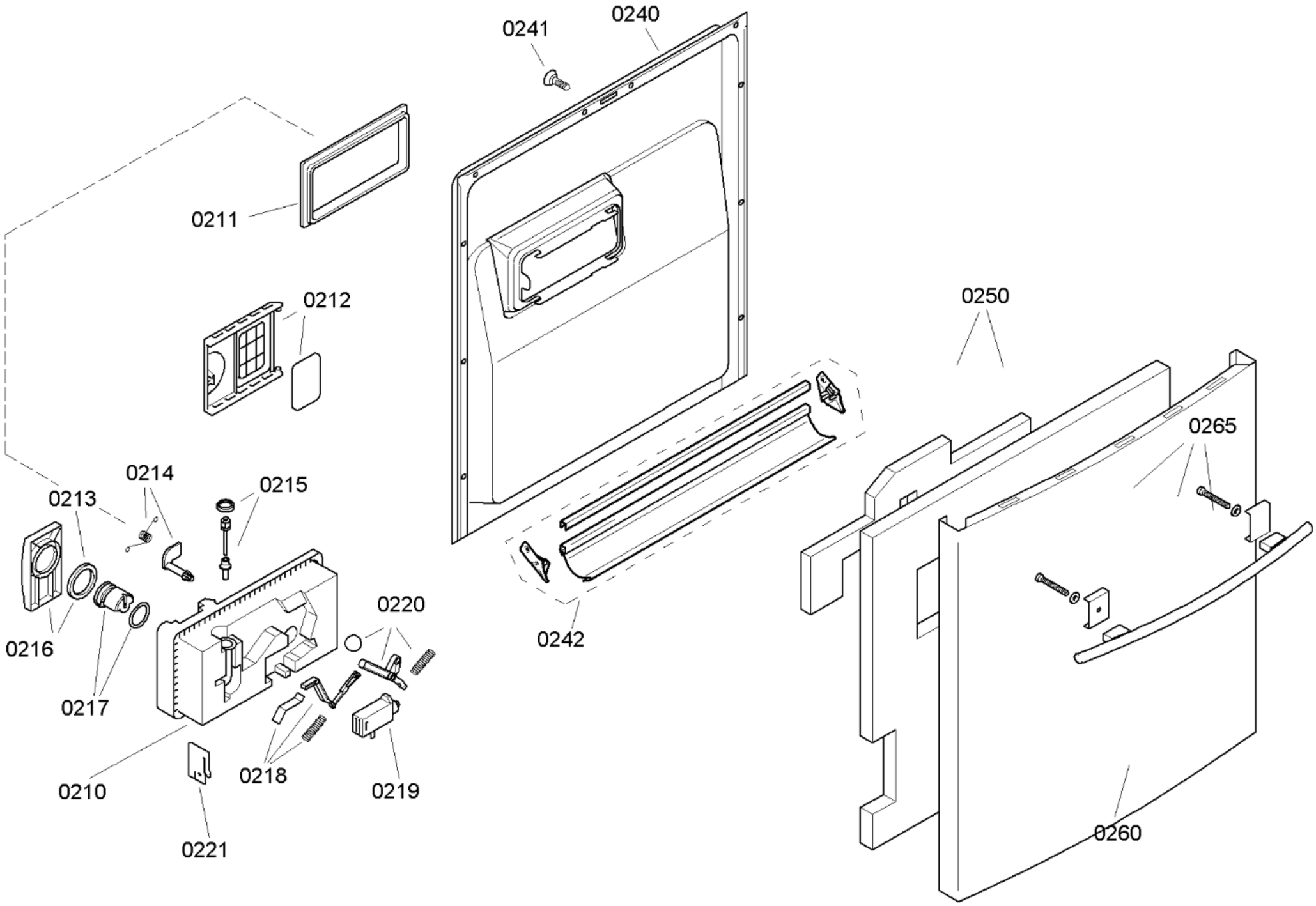

58300000113417 aet 000 b 2/6

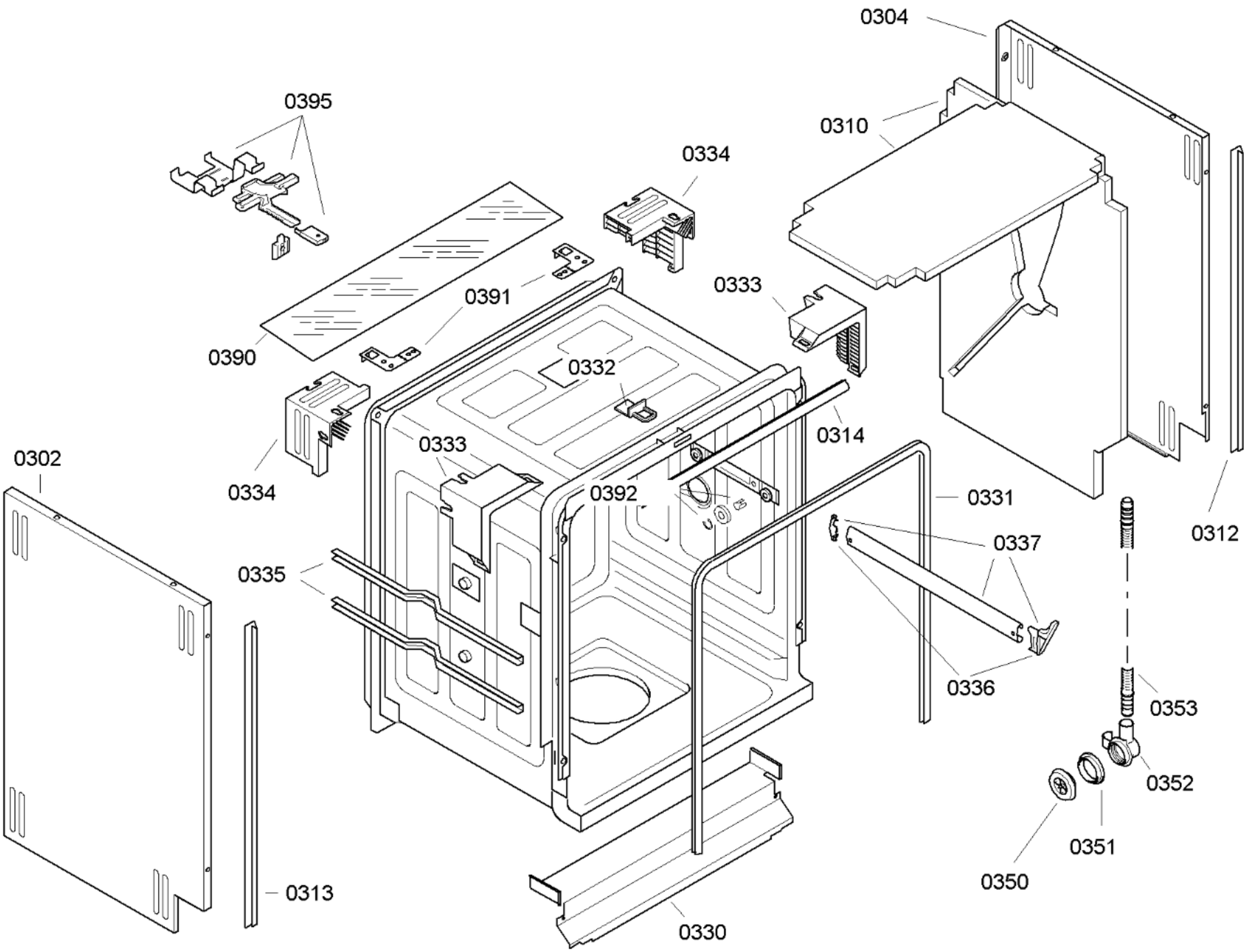

58300000113417 aet 000 b 3/6

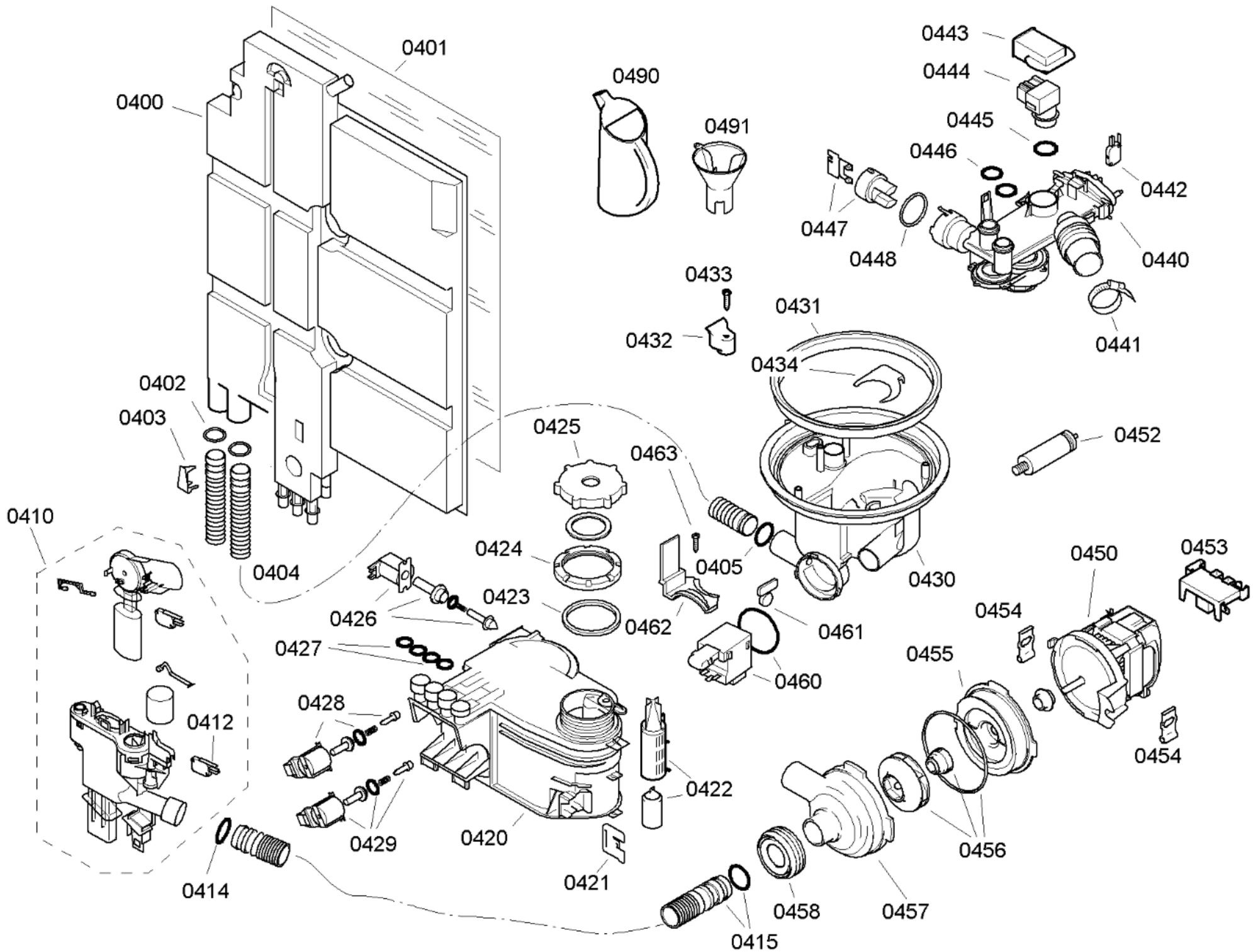

58300000113417 aet 000 b 4/6

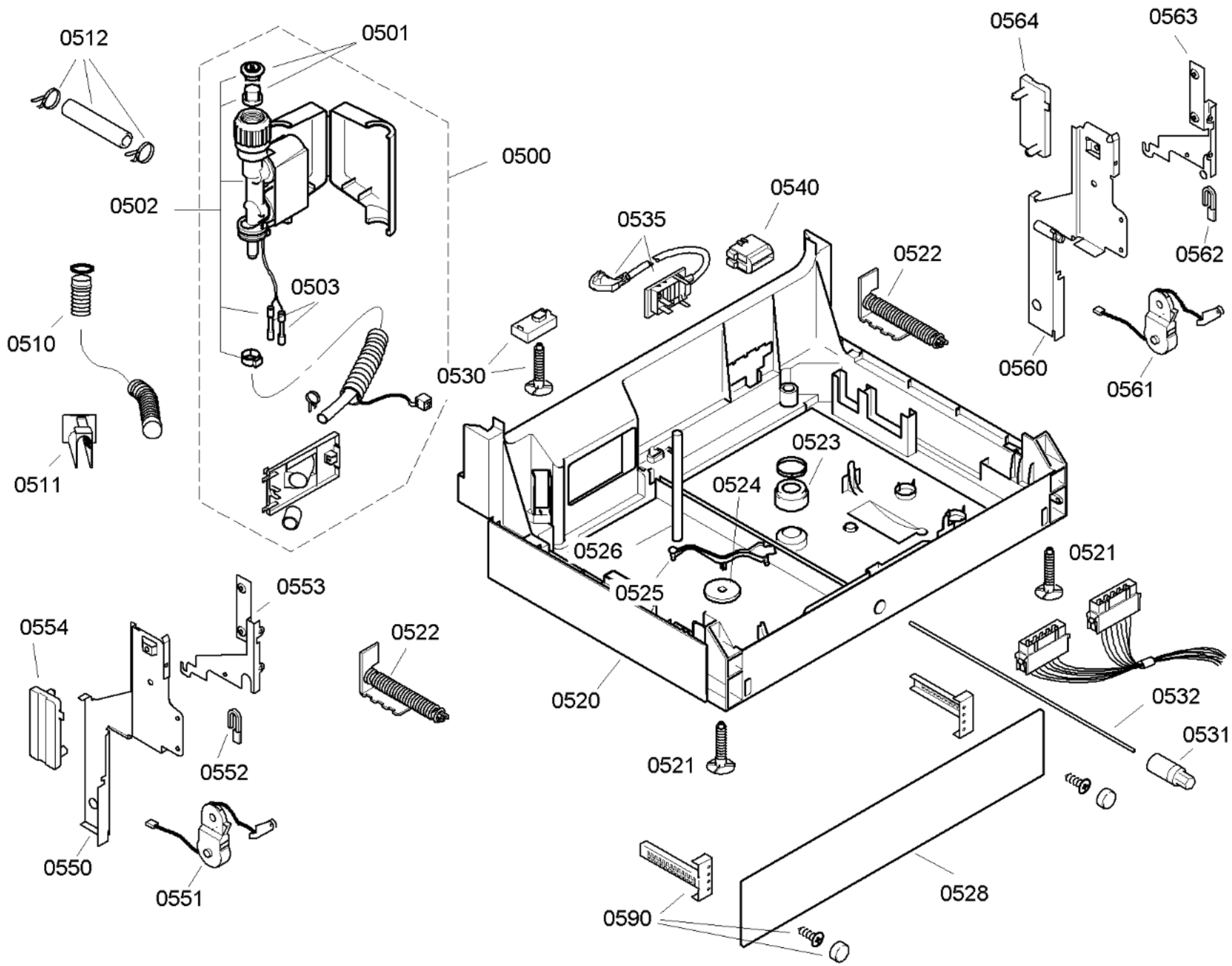

58300000113417 aet 000 b 5/6

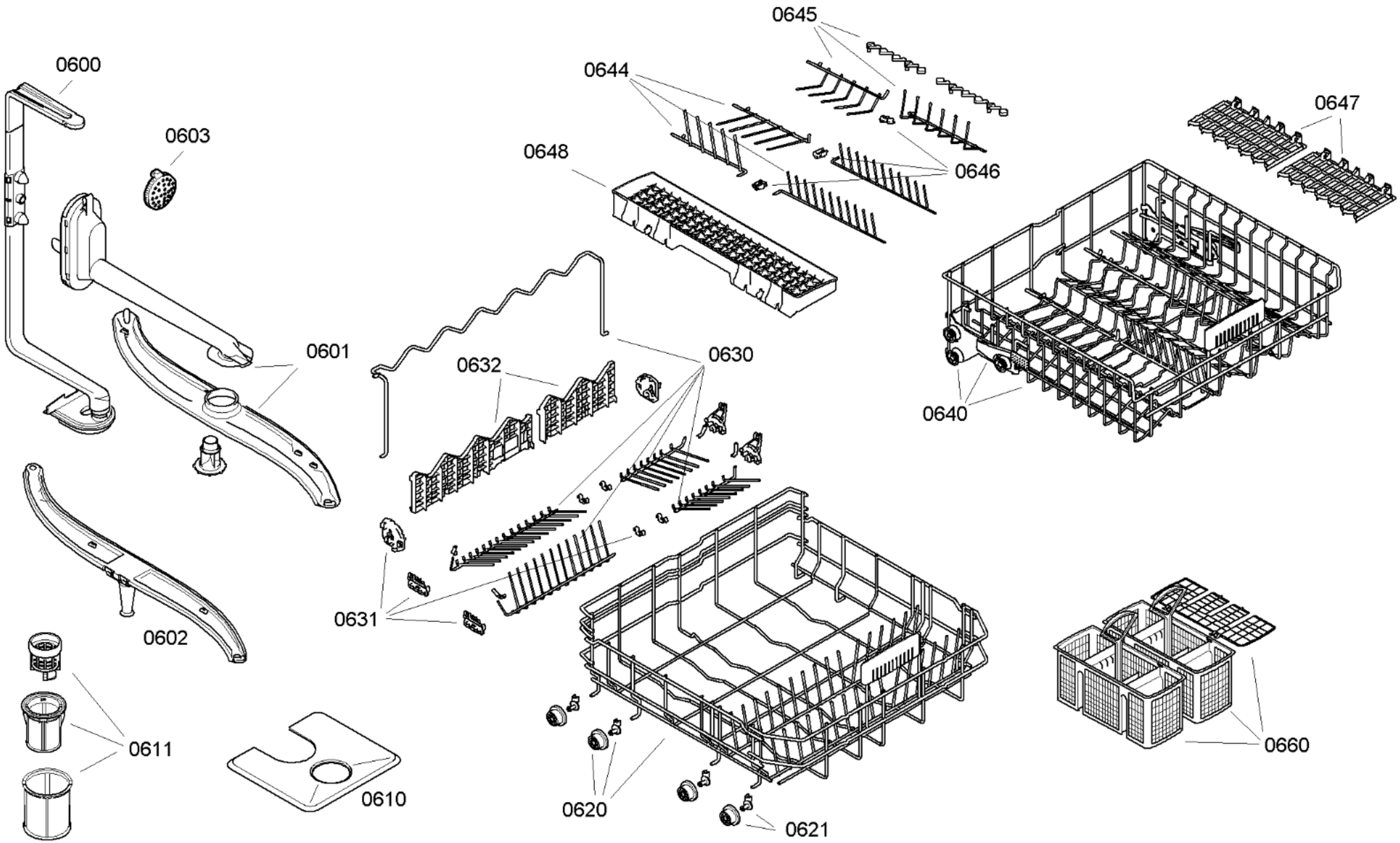

58300000113417 aet 000 b 6/6